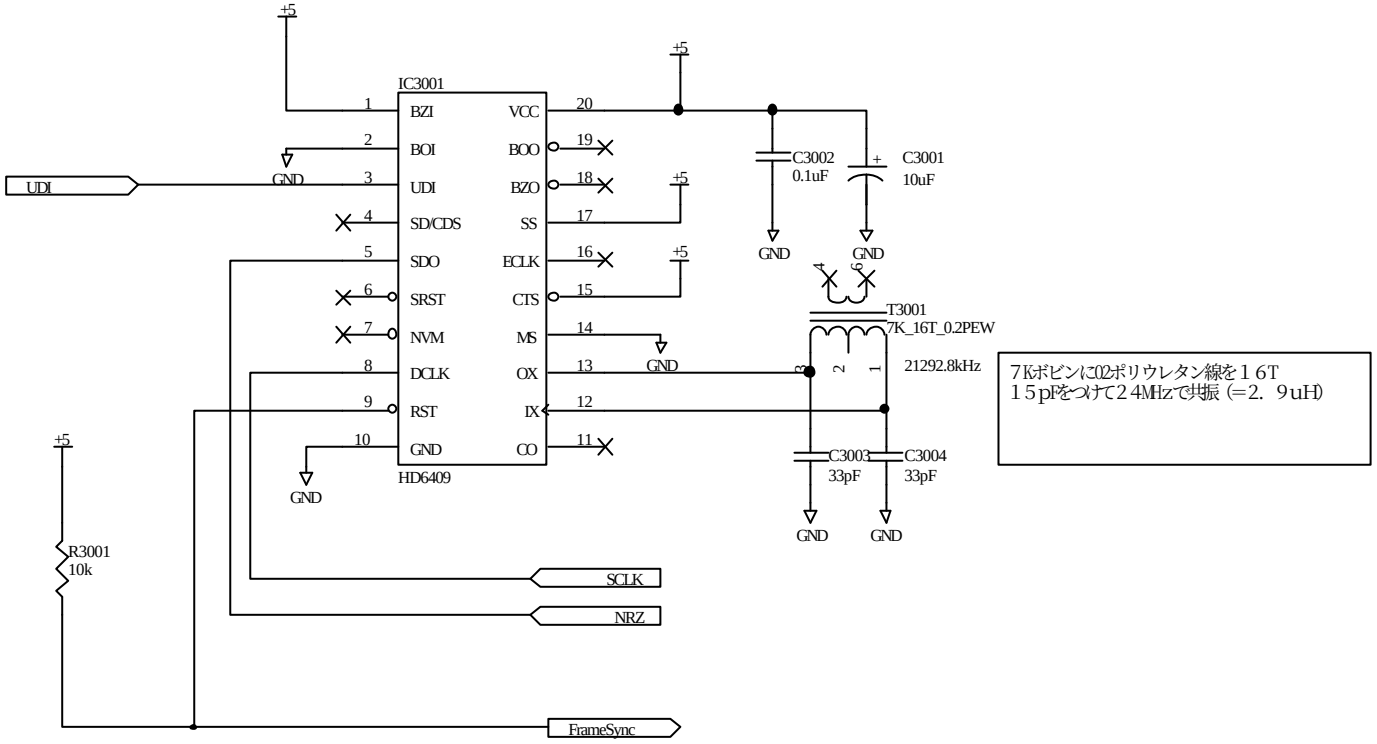

Title			*A Katsuma Workshop Inc.*
Size: A4	Number:	Revision:	
Date: 21-Jun-2000	Time: 23:10:05	Sheet 3 of 3	
File: C:\User\prj\costas1478\costas1478.Ddb - Documents\hd6409.sch			